Mo-99 2013 TOPICAL MEETING ON
MOLYBDENUM-99 TECHNOLOGICAL DEVELOPMENT

April 1-5, 2013
Embassy Suites Downtown - Lakeshore
Chicago, Illinois

High Density LEU Annular Target Qualification

Marin Ciocanescu,
TRIGA Research Reactor
Institute for Nuclear Research, 1 Campului Street, 115400, Mioveni-Romania

and

George F. Vandegrift,
Chemical Science and Engineering Division, Argonne National Laboratory
9700 S Cass Avenue, Argonne, IL 60439-4837, USA

ABSTRACT

Large-scale safe and economical production of high-density LEU annular targets in order to replace the HEU targets for medical radioisotopes is preceded by a process of target qualification. The process of qualification is intended to select the manufacturing techniques and the materials that lead to safe behavior of the target during irradiation and to an efficient target production process. A qualification program verifies the designed safety performances of high-density LEU annular targets in the real performance of targets during irradiation in the core of research reactor, by means of an extensive instrumental remote, post-irradiation examination developed inside of suitable hot cells. For this qualification process, the influence of external factors that may affect the final results was reduced to minimum concerning controlled reliable and stable/repetitive irradiation condition and well defined post-irradiation program based on qualified equipment, measuring instruments, methods, procedures, and trained staff--all those being subject to an overall Quality-Management Program. All those activities that produce information concerning data and results are filled into a special data base designed to sustain the evaluation of the behavior of each type of target and to support the final decision concerning the manufacture and economy of selected target. The paper will present in detail the qualification plan and the joint effort of specialists from Argonne National Laboratory and from Institute for Nuclear Research Pitesti.

The submitted manuscript has been created by UChicago Argonne, LLC, Operator of Argonne National Laboratory ("Argonne"). Argonne, a U.S. Department of Energy Office of Science laboratory, is operated under Contract No. DE-AC02-06CH11357. The U.S. Government retains for itself, and others acting on its behalf, a paid-up nonexclusive, irrevocable worldwide license in said article to reproduce, prepare derivative works, distribute copies to the public, and perform publicly and display publicly, by or on behalf of the Government. Work supported by the U.S. Department of Energy, National Nuclear Security Administration's (NNSA's) Office of Defense Nuclear Nonproliferation.

1. Introduction

Qualification is a process involving the evaluation of the product with respect to its safety, quality, and reliability. The aim of the qualification process is to verify whether the product meets or exceeds the specific requirements of the intended application.

Qualification includes activities that ensure the nominal design and manufacturing process will meet or exceed the specified targets (general termed as customer intended utilization specifications) [1]. The purposes of qualification is to obtain the acceptable range of variability for all critical products parameters affected by design and manufacturing as geometrical dimensions, material properties and attributes to meet the requirements of utilization in the harsh environment, i.e. high specific power during in-core irradiation of the product.

The methodology of qualification of HD-LEU annular foil target was conceived to demonstrate that the design and utilization of targets for ^{99}Mo-^{99m}Tc production for medical applications meet or exceed the specified requirements.

HD-LEU annular target is a unique product that is designed to replace HEU targets for production of medical radioisotope and to reduce the HEU utilization in civil application in order to sustain the nonproliferation goal.

Qualification of this product implies the development of entire qualification methodology based on:

- definition of irradiation conditions;
- set up a nuclear safety analysis for testing and licensing and as a reference document for future utilization;
- development of methods and procedures for post-irradiation examination and data collection and processing;
- design, manufacture, and installation of dedicated tools, instruments, and remote-control devices for irradiation and post-irradiation examination.

Qualification planning and performance of activities is the most important stage in the cycle HD-LEU -target development. Performance of the qualification test-plan is time consuming and costly, but properly qualified targets will satisfy nuclear safety, reliability, and economical criteria, providing future users with confidence in this product.

2. Qualification methodology for HD-LEU Annular Target

The methodology of qualification of the HD-LEU annular target was conceived to demonstrate that the design, manufacturing, and utilization of targets for ^{99}Mo-^{99m}Tc production for medical applications meet or exceed the specified requirements. See Figure 1 [1].

This methodology consists of:

- Collection of product-configuration and -materials information;
- Collection of application requirement information;
- Analysis of strength limits and margins, failure modes/mechanism, and effects;
- Defining qualification requirements;
- Planning of the qualification test matrix;
- Testing;

- Collection, analysis, and verification of data for potential failure.;
- Assessment of target quality and reliability.

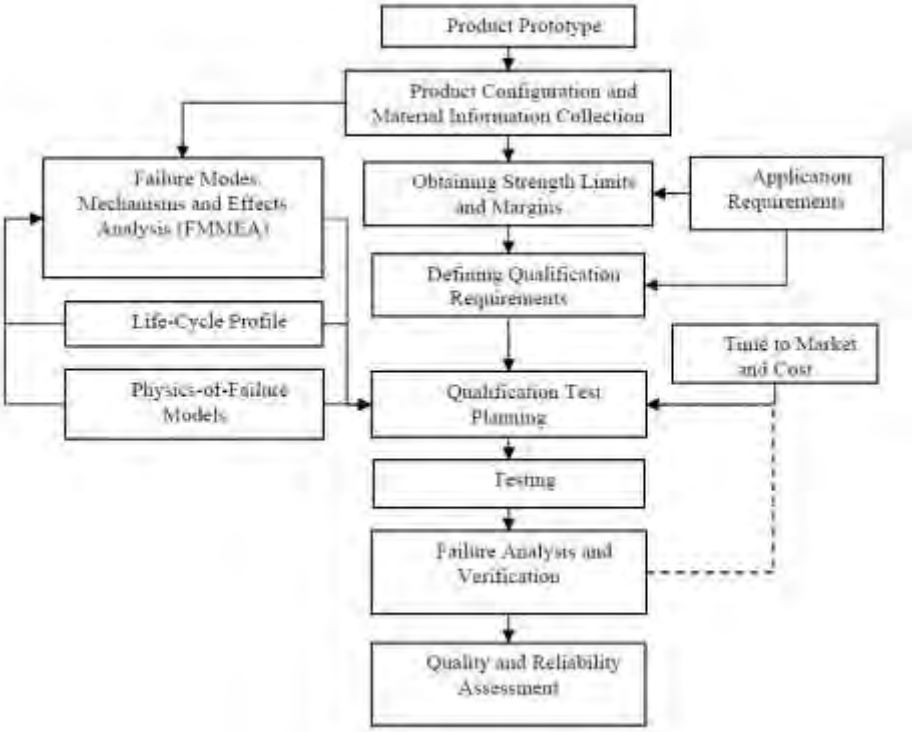

Figure 1.Flowchart of methodology of product qualification[1]

2.1. Product configuration and materials

The product (the annular LEU foil target) designed by Argonne National Laboratory was described in a year-2000 publication[2]. The target consists of an 0.12-1.4 mm thick LEU foil enveloped in a 0.015mm thick nickel foil as fission-recoil barrier, which is held between two aluminum alloy tubes that are circumferentially welded. The geometrical dimension of LEU foil are in the range of 70mm and 50mm.

There are three candidate LEU foil material obtained by three technologies (A, B, C) and four candidate materials for fission-recoil barriers (nickel foil, aluminum foil, electroplated nickel, and electroplated zinc --see Figure 2.

Figure 2. Target configuration

The aluminum dimensions are internal diameter 27.99mm, external diameter 29.77mm, length 165mm. The product has many similarities with an tubular i.e. annular fuel element with aluminum cladding. The cladding ensures mechanical stability, heat transfer, corrosion resistance, and the most important function of being a barrier for fission-products generated during irradiation of the metallic LEU foil.

2.2. Application requirements

Application requirements mean:
- acceptable behavior during irradiation;
- acceptable behavior during transport and handling;
- acceptable behavior during LEU-foil recovery;

Acceptable behavior during the irradiation process means that:

- mechanical stability of the target caused by the internal stress at foil-cladding interface as a consequence of LEU-foil growth under irradiation;
- the cladding integrity should be maintained and ensured during in core irradiation to prevent target failure and releases of gaseous fission products to the reactor pool;
- the corrosion resistance of aluminum alloy tubes and welds should be controlled;
- the resistance to wear due to flow induced vibration should be evaluated;
- low man-power/man-hours consumption at the hot cell during LEU-foil recovery and aluminum-cladding separation and disposal as solid waste before chemical dissolution of foils should kept at minimum;
- foil handling after recovery from the cladding should not cause foil damage.

2.3. Strength limits and margins, failure modes/mechanism

Strength limits are those of aluminum alloy tubes following the manufacturer data and standards at operation temperature i.e. ~ 100^0C. For this application, the design provides 20% margins for clad strength before clad rupture due to aluminum alloy ductility.

Failure mechanisms were studies by complex analysis [3]. The worst case is realized by excessive LEU foil growth where the foil-clad-interaction mechanism could lead to target deformation and eventually to clad or weld failure, which is an unacceptable condition for this product. Effect analysis concern the releases of short-lived gaseous fission products from the cladding, which is similar to a fuel element failure in the reactor core leading at least to several days of reactor unavailability. This is an unacceptable effect and the design and testing, including limits of utilization with justified margins, is the first issue of annular target reliability.

2.4. Definition of qualification requirements

All targets containing LEU foils from A, B, C technologies and types recoil barriers will be irradiated in similar conditions to avoid variability in behavior during harsh environment, this means:

- thermal power of each target will be maximum 10kW;
- LEU foil temperature 125^0C;
- Target cladding temperature 117^0C;

Calculations of neutron flux distribution and thermal hydraulic analysis of LEU foil-target, irradiation conditions for the target, power and temperature for the foil and cladding, water flow and temperature in core flow were (see Figure 3.).

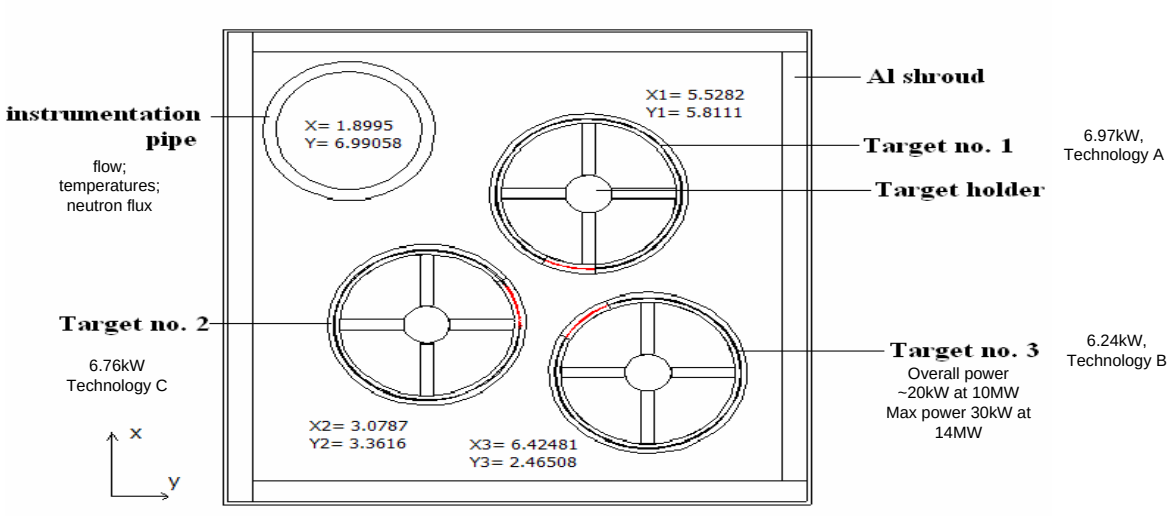

Figure 3. Cross section of irradiation device showing the irradiation conditions

- the first condition for qualification is the cladding integrity in any forecasted circumstances;
- the second condition for qualification is that the mechanical stability of the cladding‘s dimensional modification in all dimensions will be less than 1% from that of the as-manufactured geometry;
- the third condition is that the foil recovery in the hot cell can be performed without effort- - the foil is not stuck (bonded) to the aluminum tubes (fission-recoil-barrier efficiency);

2.5. Qualification tests planning

The methodology of qualification by testing requires that the product will be subject of a series of tests and examinations representative of normal conditions for utilization and in limiting conditions that can lead to failure.

The test matrix included three types of foils A (rolled foil with a beta-quench following rolling), B (cross-rolled foil), C (KAERI roll-cast foil with four types of fission-recoil barriers—12 targets. For three reactor power levels/irradiation-time3,irradiation of 36 targets will be necessary. Simultaneous irradiation of three targets containing foils A, B and C means 12 irradiations campaigns followed by 36 targets post irradiation examination.

To perform qualification test planning, several categories of activities were engaged in:

- neutron and thermal hydraulic design of the irradiations;
- drafting of a safety report for a special-experiment license;
- design and manufacture of an instrumented, reusable irradiation device that ensures similar conditions for irradiation of targets A, B and C (see Figure 4);
- design, building, and installing necessary devices, instruments, and fixtures to perform special post irradiation examination and measurements;

- development and qualification of method and procedures for PIE and data acquisition and processing;
- design of a database for incorporation of data will include:
    - all data concerning product configuration and materials originated from the history-of-fabrication file for each target ;
    - irradiation history of each target;
    - results of nondestructive examination of each target;
    - result of destructive examination of each target;
    - results of LEU foil examination at the end of irradiation.

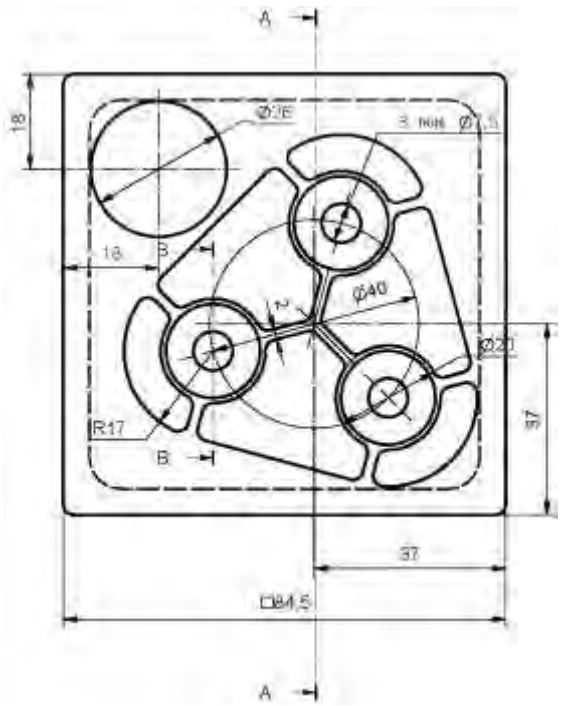

Figure 4. Cross section of irradiation device

The overall qualification test plan for three set of three targets is presented in Figure 5.

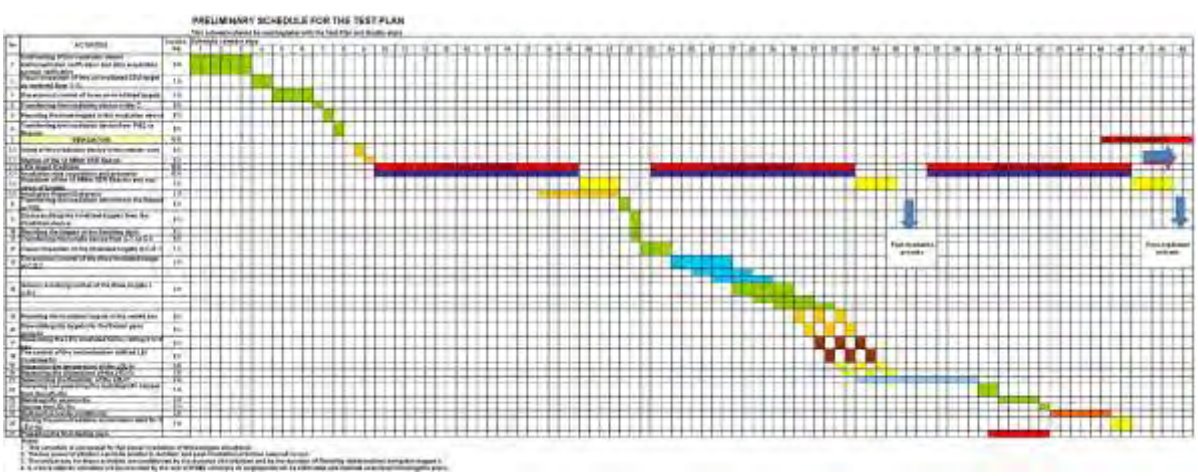

Figure 5. Qualification test plan

2.6. Qualification test

After the qualification requirements are defined (section 2.4), the qualification test will be conducted to examine whether the product can meet the requirements. The lifecycle of an HD LEU target is a short one in comparison with the lifecycle of nuclear fuel for nuclear research reactors. The useful lifetime of target is represented by irradiation time at design power and cooling time before the post-irradiation process of disassembling it for foil recovery. For the scope of testing the value of standard irradiation time at maximum allowable power was increased to 12 full-power days.

The life cycle profile (LCP) of an HD-LEU target is a simple one consisting of an irradiation at a constant level of power; an unscheduled reactor shutdown may occur, but this are not part of a target's typical LCP. Failure mode/mechanism and effects analysis (FMMEA) are determined by the lifecycle loads; in fact, they are not typical cycle loads.

The test that targets identification of effects of critical failure was selected as a qualification test due to the fact that the testing to failure or till the end of life produced by critical failure are not acceptable in an open pool. Use of a reactor for evaluation of a large number of values and data concerning target behavior under irradiation allows the evaluation other product's susceptibility to failure.

Critical failure mechanism is that which lead to cladding degradation by foil cladding interaction.

The second failure mechanism, which is not critical, will lead to changes in the geometry of target by deformation. This deformation will lead to degradation of heat transfer and the acceleration of clad degradation. The qualification test for an HD LEU target is performed at using target powers higher than foreseen for the target for a duration of twice the normal lifecycle irradiation time. This could be called "quantitative accelerated testing" when the researcher is interested in identifying failure-mode precursors and evolution without attempting to forecast product life under normal use condition when the life is relative shorter. The accelerated load factors associated with accelerated testing are the of specific power levels produced by target and double the lifecycle duration.

A large number of post-irradiation activities are required, starting with visual inspection of each target and profilometry for targets irradiated for different time and power levels, in order to evaluate the deformation of the inner and outer cladding. These deformation data can then be correlated with target irradiation. For this accelerated test, the environment and operational conditions are similar for all targets tested; the reactor power/time profile are the same value for all targets subject to testing.

The testing program provides for each irradiated target the following dedicated PIE:

- visual examination/inspection documented with photographs;
- metrology, profilometry determination, dimensional control, data acquisition concerning straightness, bending, ovality, elongation; all are useful for mechanical analysis of target structural stability/behavior. The precision of measurements is 0.01mm;
- gamma scanning of the irradiated target to evaluate exposure and power distribution in order to infer internal stress and strain of foil, which is constrained between the inner and outer claddings (Figure 6);

- remote operation of a target-disassembling device, which is inside of an air-tight box installed in hot cell in order to determine the composition and amount of noble fission product released by using a quadrupole mass spectrometer (see Figure 7 for a diagram of the disassembly device).

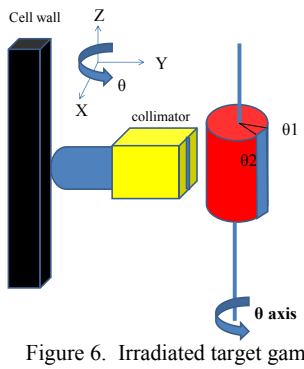

Figure 6. Irradiated target gamma scanning

Figure 7. Disassembling device

- determination of the contamination on the outside of the fission-recoil barrier;
- dimensional measurements of the LEU foil through a wall periscope and digital images analysis;
- metallographic analysis of cross sections of the foil and scanning electron micrographs (SEM) on fragments of foil, in order to evaluate the swelling of the foil manufactured by the A, B, and C technologies;
- determination of flexibility of irradiated foils by comparison with those of un-irradiated.

Filling the database with results of testing from each target.

The rate of target failure could be established by similarity with behavior of aluminum fuel cladding in research reactor. The process of qualification will be developed in three progressive steps that will produce feedback in design and consequently in an evolving process of manufacture of targets. Each iteration will produce a new set of samples that will be examined in qualification steps 1, 2 and 3. At the end of an iteration, a category of regulatory and compliance test will be performed in order to proceed to large production of qualified targets. A critical component that was identified as being the LEU foil manufacturing technology. The proposed qualification testing program will allow the ranking and selection of suitable foil technology from which qualified target will be produced. This is a technology development model for HD Annular Target, and this model could be characterized by Technology Readiness Assessment (TRA) to demonstrate that this critical technology is working as intended. The HD LEU Annular Target technology development is proposed to reach TRL5 for high-volume production, including technology demonstration [5].

The relationship between the Technology Readiness Level and stages of qualification of the product, including successive feedback to design and manufacture is presented in Figure 8.

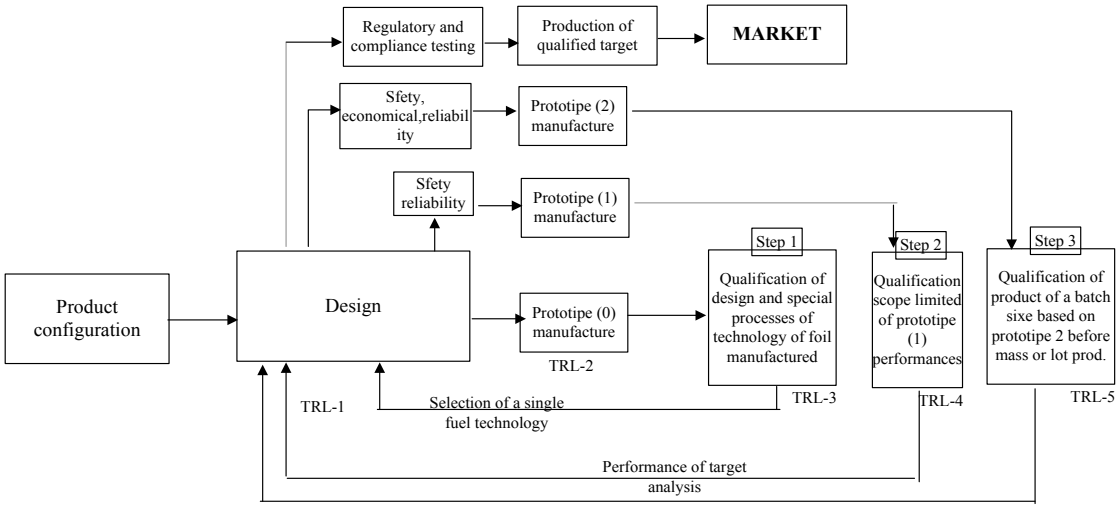

Figure 8. Schematic of TRL level of a technology a the qualification program

3. Dedicated research infrastructure for HD-LEU Annular Target Qualification

The Institute for Nuclear Research Pitesti Romania was engaged in the process of HD-LEU Target qualification and has the ability to design, build, commission experimental and testing equipment dedicated to sustain the qualification process. The INR operates a 14MW TRIGA research reactor a post-irradiation-examination laboratory, and a radioactive-waste-treatment facility that allow the implementation of this qualification program.

4.Institute experience

In the past decades, the INR Pitesti was involved in the development of nuclear fuel for CAND600 power reactor. Irradiation of experimental samples of fuel and type test were performed in special irradiation devices installed in 14MW TRIGA reactor. The post irradiation examination of fuel was performed in a hot cell laboratory in order to evaluate the fuel technology features developed by the Institute.

In the framework of a basic ordering agreement**,** a team of specialists from Argonne National Laboratory, The University of Missouri, Y-12 National Security Complex Oak Ridge teamed with Institute specialists to perform the evaluation of program concerning HD LEU Target qualification.

5. Integrated management system

The Institute has a long tradition in the application of Quality Assurance standards since 1978 and is accredited by Lloyd's register in conformity with ISO-OH SAS current standards. The processes developed by Institute are based on validated procedures and methods.

6. Conclusions

HD-LEU Annular Target qualification includes physical tests on manufactured prototypes and accelerated irradiation tests for successful product qualification. Product configuration, materials, and technology, including the lifetime, are considered as inputs to identify critical potential failure mechanism.

Application requirements from customer are considered as being of paramount importance for qualification of product in order to meet the client expectation when quality and reliability of a product are assessed on the basis of qualification test results. Duration of the testing program and continuity of qualification process control the time to market of product and increases of the cost of the product. Time-to-market and cost are two important factors for the HD-LEU annular target . It is a new product, as well a new technology, with important tangible results.

4. References

[1] W. Wang, M.H. Azarian, M. Pecht, "Qualification for product development" proceedings of the ICEPT-HDP 2008, Shanghai,China, July 28-31, 2008.

[2] G. Vandegrift, C. Conner, G.L. Hofman, "Modification of targets and processes for conversion of ^{99}Mo production from High to Low Enriched Uranium" Ind.Eng.Chem.Res,2000,39(9), pag.3140-3145.

[3] K.Turner, G. Solbrekken, C. Allen, "Thermal-Mechanical Analysis of Annular Target Design for High Volume Production of ^{99}Mo Using LEU Uranium" Proceedings of the ASME 2009 International Mechanical Engineering Congress& Exposition; Lake Buena Vista, Florida, USA, November,2009.

[4] C.Toma, V.Gorea, P.Busuioc, C.Iorgulis "Activities related to TRIGA 14 MW research reactor utilization for ^{99}Mo production technology development at Institute for Nuclear Research , Pitesti Romania" Proceedings of the RRFM European Research Reactors Conference; Roma, Italy, 20-24 March 2011.

[5] L. Jolly, J. Creasy,Ch. Allen, G. Solbrekken, "Development, qualification, and manufacturing of LEU-foil targetry for the production of Mo-99", Proceedings of the 1st Annual Molybdenum-99 topical meeting; Santa Fe, New Mexico, USA, 4-7 December,2011.