SRNL™
SAVANNAH RIVER NATIONAL LABORATORY
Operated by Savannah River Nuclear Solutions, LLC

We Put Science To Work

Pre-Conceptual Design of the Tritium Purification System for SHINE Mo-99 Production

J. E. (Jim) Klein

Hydrogen Processing Group

Savannah River National Laboratory

2013 Mo-99 Topical Meeting, April 1-4, 2013

Embassy Suites Chicago Downtown

SRNL-STI-2013-00105-S

SHINE Mo-99 Process

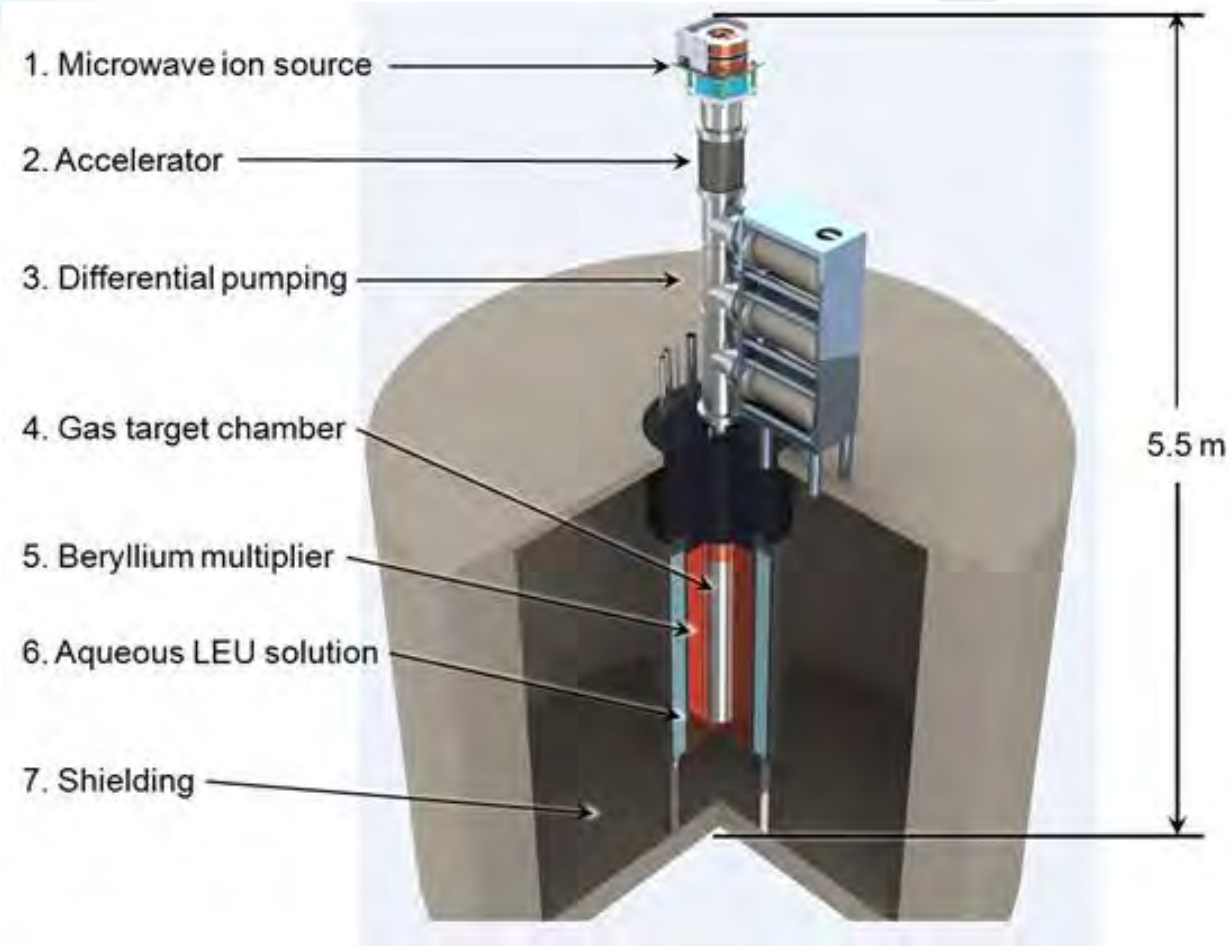

1. Make neutrons to irradiate target solution
2. Process target solution to recover product, remove by-products, and maintain chemistry

SHINE D-T Neutron Production Process

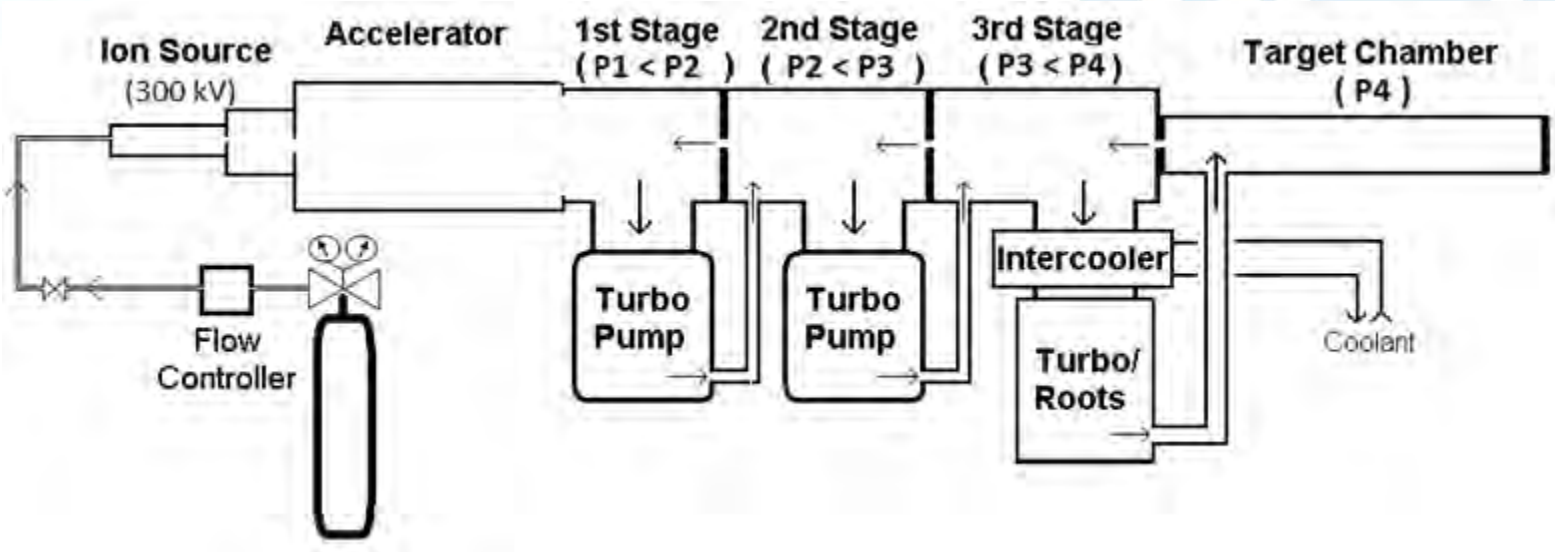

- Neutrons are made by reactions between deuterium and tritium atoms
- Accelerate atoms into target
- Recover tritium for re-use

SHINE Neutron (D-D) Demonstration Process

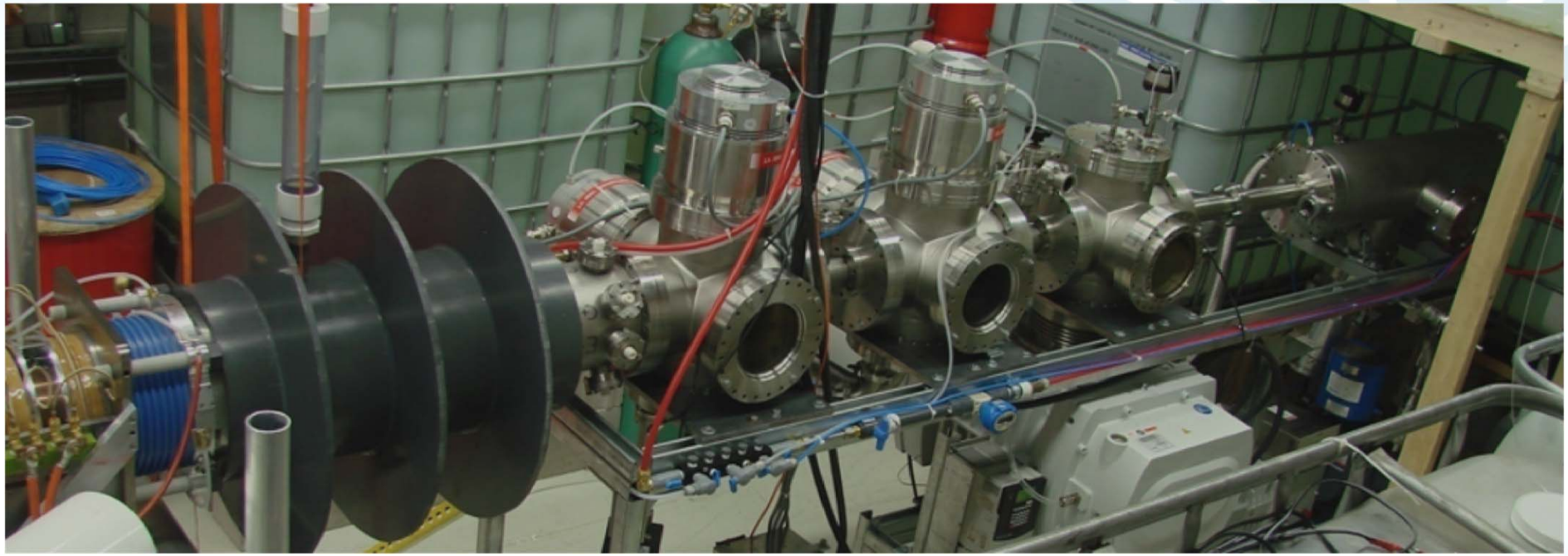

Tritium Fuel Cycle Needed: All Cycles Similar

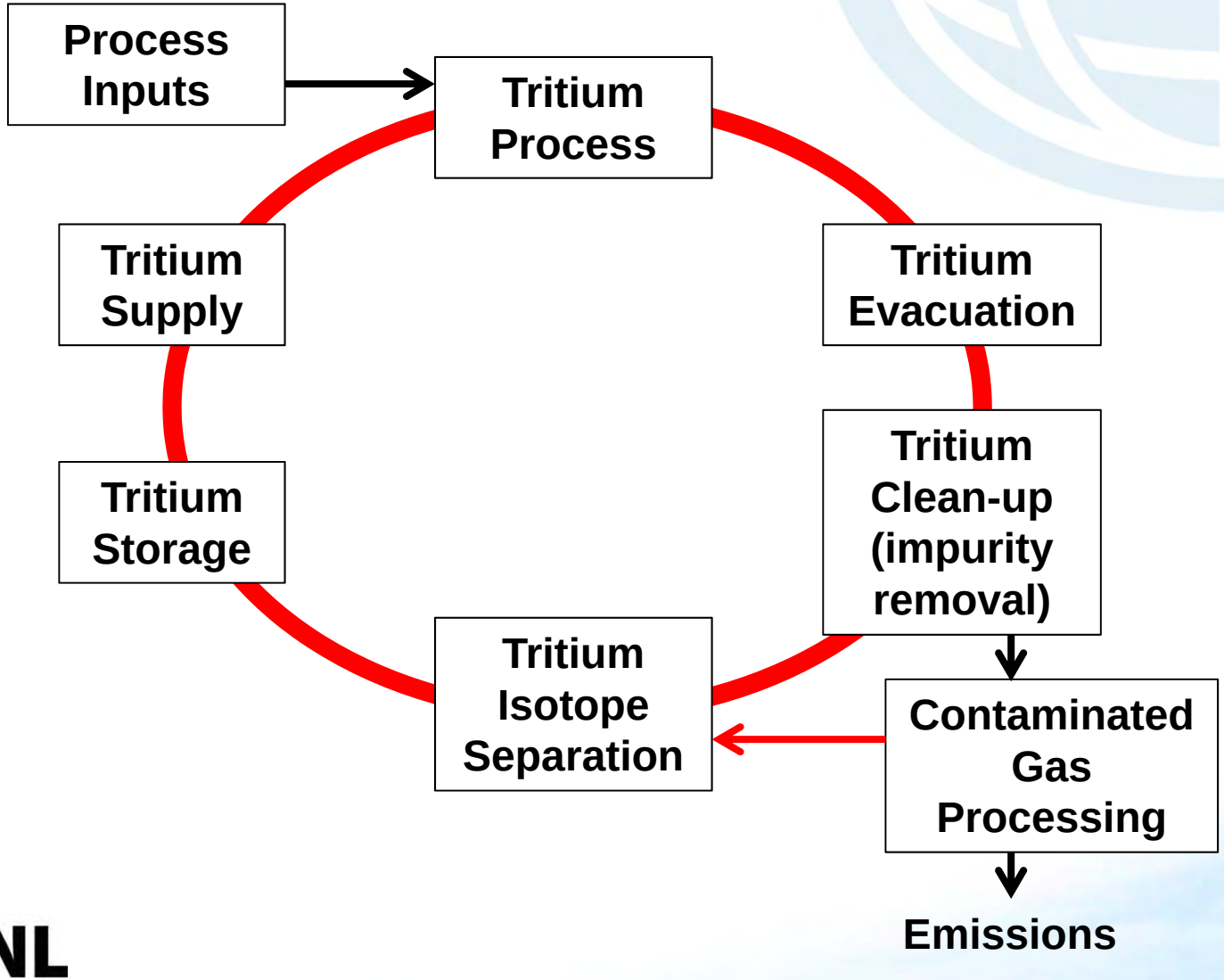

SHINE Fuel Cycle w/Tritium Purification System (TPS)

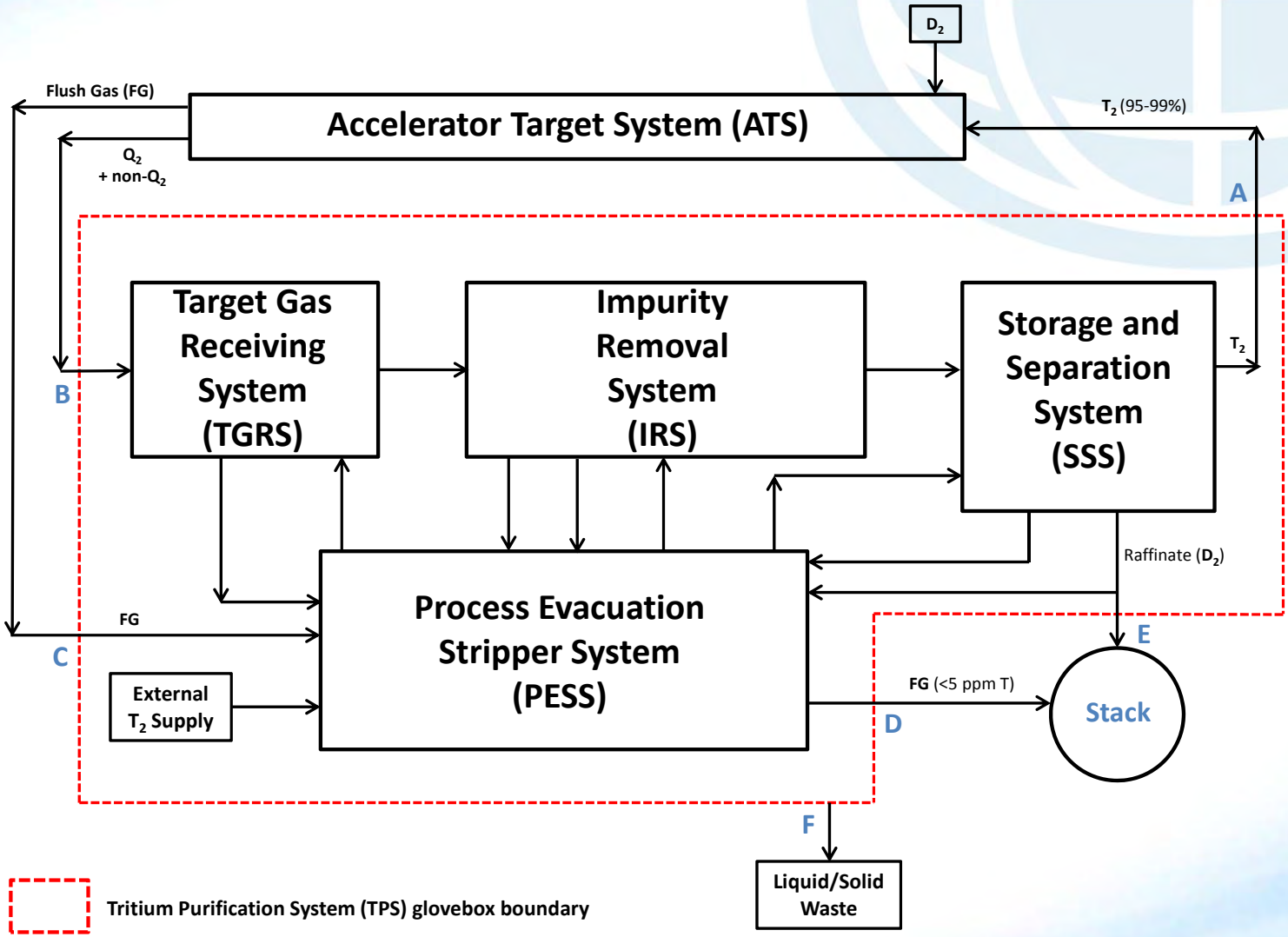

SRNL

TPS Overview - High Level Functions

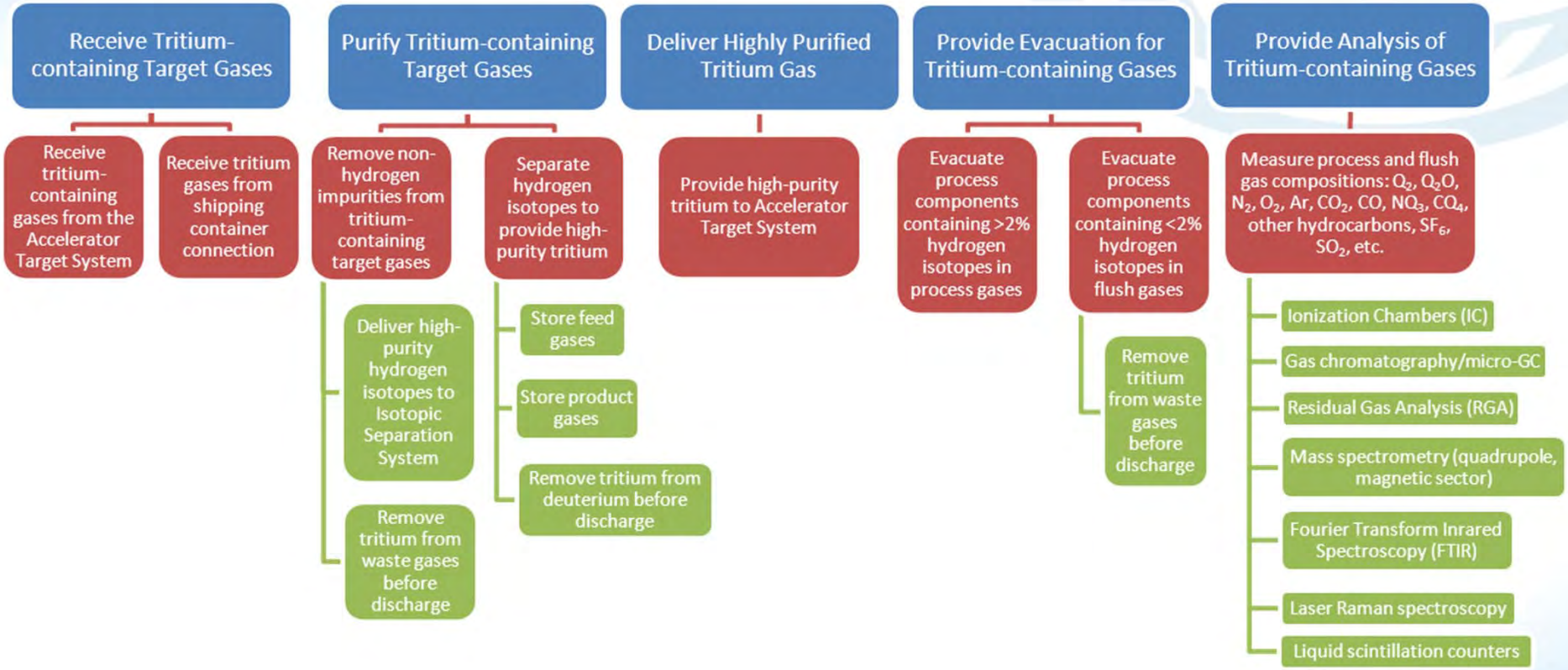

SRNL

Target Receiving System (TGRS)

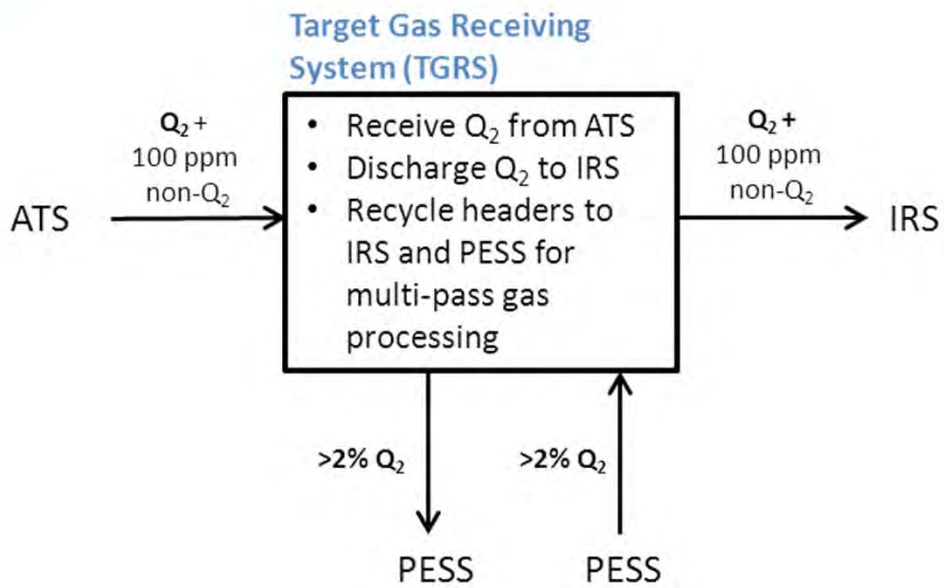

Candidate Technologies

- Normetex scroll pump and Metal Bellows pump
  - Normetex pumps unavailable
  - Alternate pump testing needed
- "Booster" pump from ATS needed to feed TGRS
- Recycle headers (IRS/PESS)

Impurity Removal System (IRS)

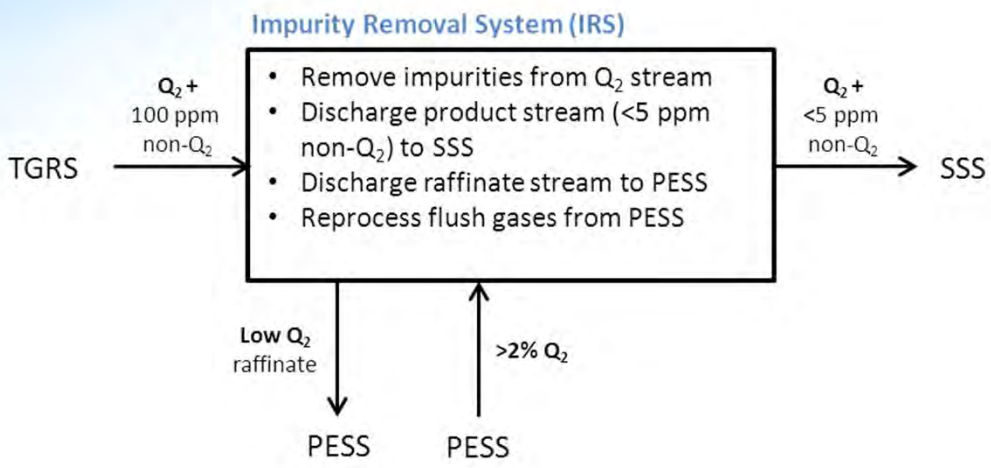

Technology selection dependent on process configuration…

- Bulk Q_2 removal in 1st step?
- Non-Q_2 reduction in 1st step?

Candidate Technologies

- Ambient Molecular Sieve Beds (AMSB)
- Cryogenic Molecular Sieve Beds (CMSB)
- Low Temperature Molecular Sieve Beds (LMSB)
- (Catalytic) Oxidation via Plug Flow Reactor (PFR)
- Metal Hydride Getter Beds
- Getter Beds (SAES zirconium-based)
- Permeators/Diffusers (Pd-Ag)
- Caprice (permeator combined with plug flow reactor)
- Palladium Membrane Reactor (PMR)
- PermCat
- High Temperature (protium) Exchange (HITEX)
- Cold Traps

SRNL

Impurity Removal System (IRS) – Possible Impurities

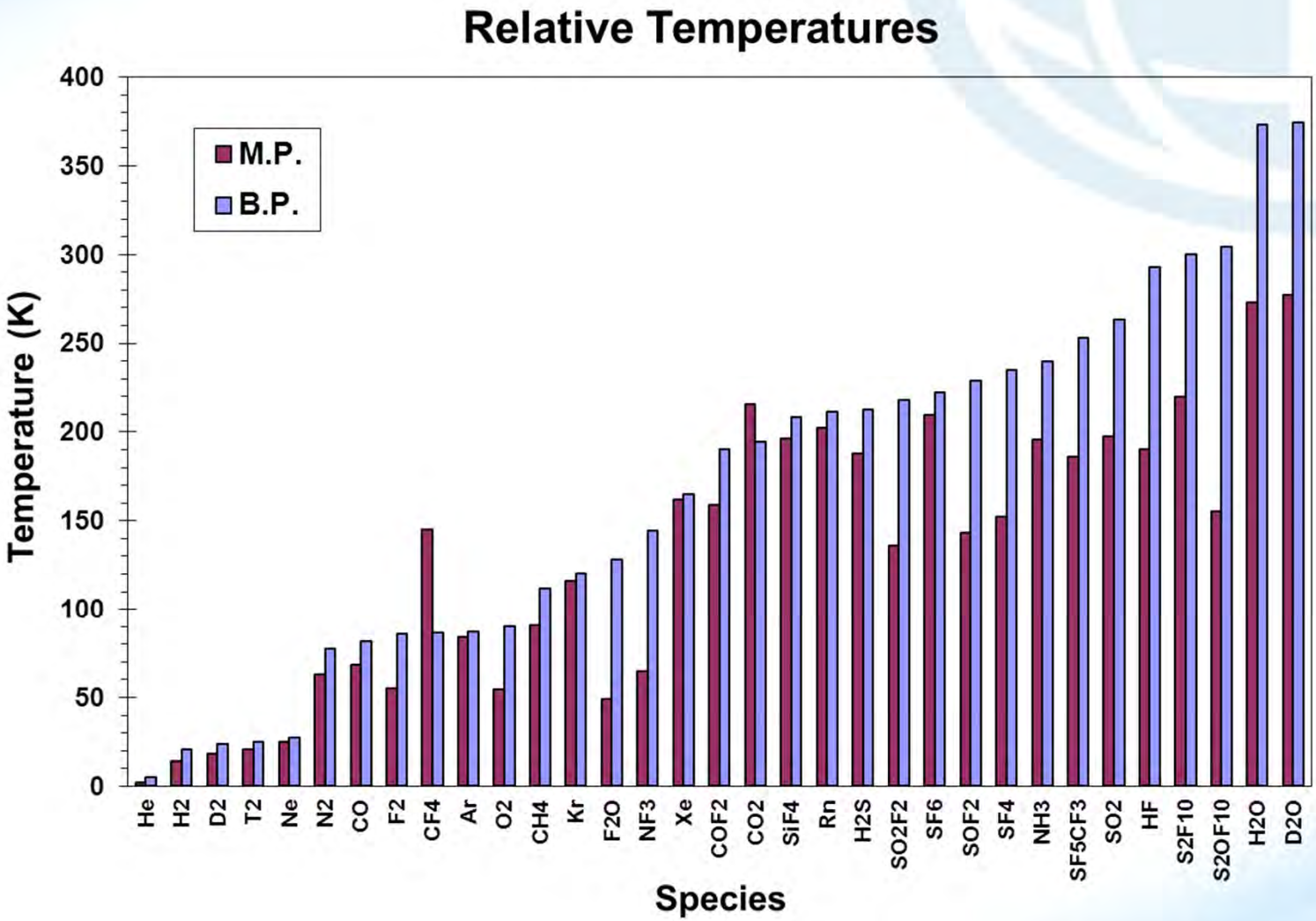

SRNL

Impurity Removal System (IRS)

Focus on non-Q_2 reduction in 1st step

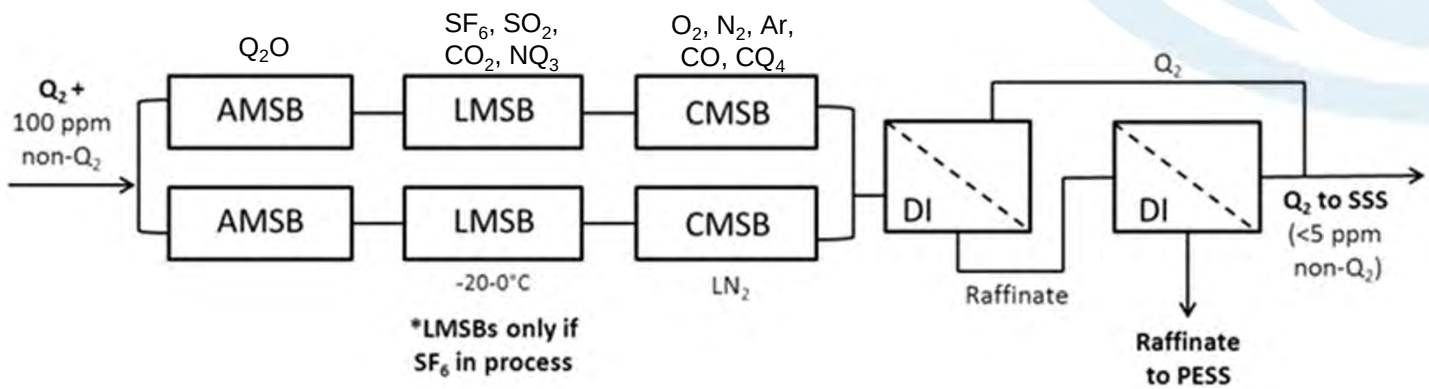

Advantages	Disadvantages
• Highly reliability • Treats entire process stream to ensure that majority of non-Q_2 impurities are removed prior to diffuser (DI) train • Extend life of diffusers (essentially Q_2 + ^3He) • *SF_6 and its decomposition products can all be trapped in place for ease of disposal*	• More components/larger space requirements • Requires bed regeneration • Requires disposal method for filled beds • Collection of tritiated water

SRNL

Storage and Separation System (SSS)

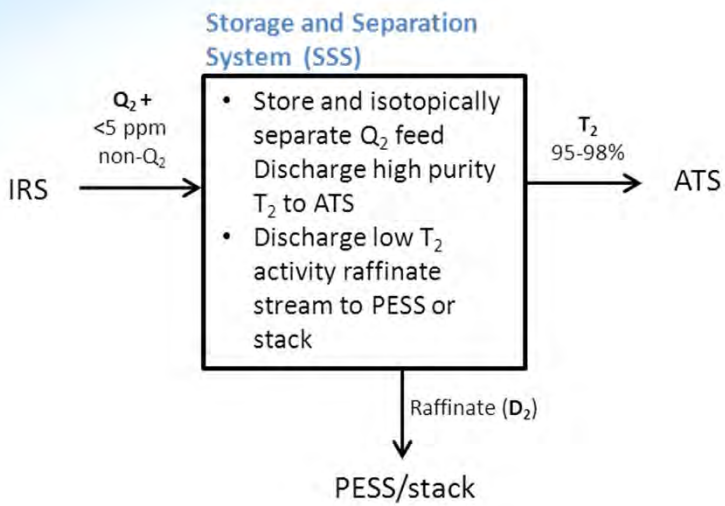

Candidate Technologies

- Isotope separation system (ISS) –
  - Cryogenic Distillation
  - Thermal Cycling Absorption Process (TCAP)
- Feed and product stream storage
  - Tanks
  - Hydride beds
    - Depleted uranium (DU)
    - Palladium (Pd)
    - La-Ni-Al alloy (LANA)

Technology Selection

Isotopic Separation

- TCAP is the preferred method for HD separation
- Mini-TCAP may be appropriate alternative for tritium inventory and size/glovebox space considerations

Gas Storage

- Hydride storage beds preferred over tanks for feed and product gases to avoid ^{3}He blanketing issues (2-3 beds for both feed and product storage)
- If tanks used, hydride beds may still be needed as a buffer
- Pd or LANA are the preferred hydride materials for the storage beds due to their ^{3}He retention properties
- Pd is more expensive but is damaged less by He-3 accumulation in the hydride

Process Evacuation and Stripper System (PESS)

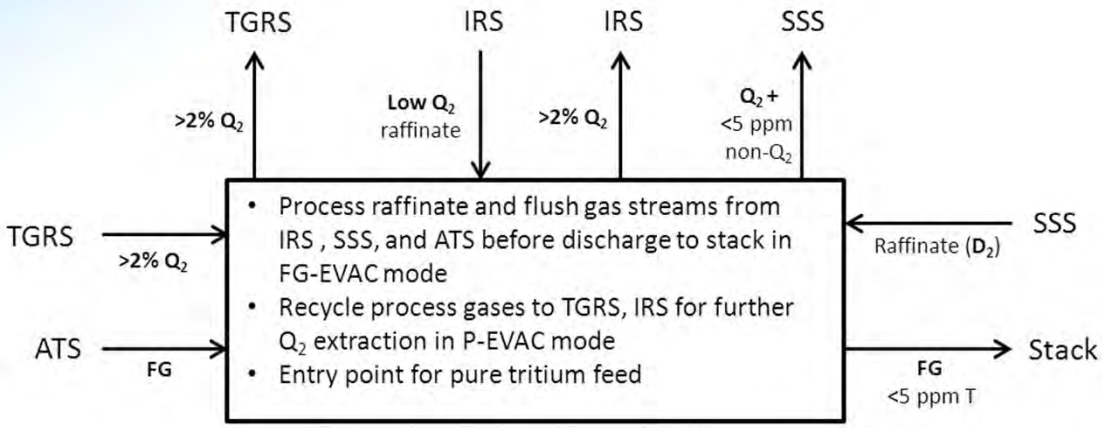

Process Evacuation Stripper System (PESS)

****Trains A and B need to be completely redundant though PESS-A will primarily function as FG-EVAC and PESS-B will primarily function as P-EVAC**

Candidate Technologies

- Accumulation tank(s)
- Vacuum pumps (scroll/metal bellows)
- Ambient Molecular Sieve Bed (AMSB)
- Cryogenic Molecular Sieve Bed (CMSB)
- Disposable Molecular Sieve Bed (DMSB)
- (Catalytic) Oxidation
- Metal hydride/getter beds
- Getter beds (SAES)
- Permeators/diffusers
- Palladium Membrane Reactor (PMR)

Technology selection dependent on process configuration…

- Process gases (>2% Q_2) discharged back to IRS diffuser train?
- Process gases recirculated within PESS through additional diffuser?

SRNL

Process Evacuation and Stripper System (PESS)

Configuration 1:
Process gases to IRS diffusers

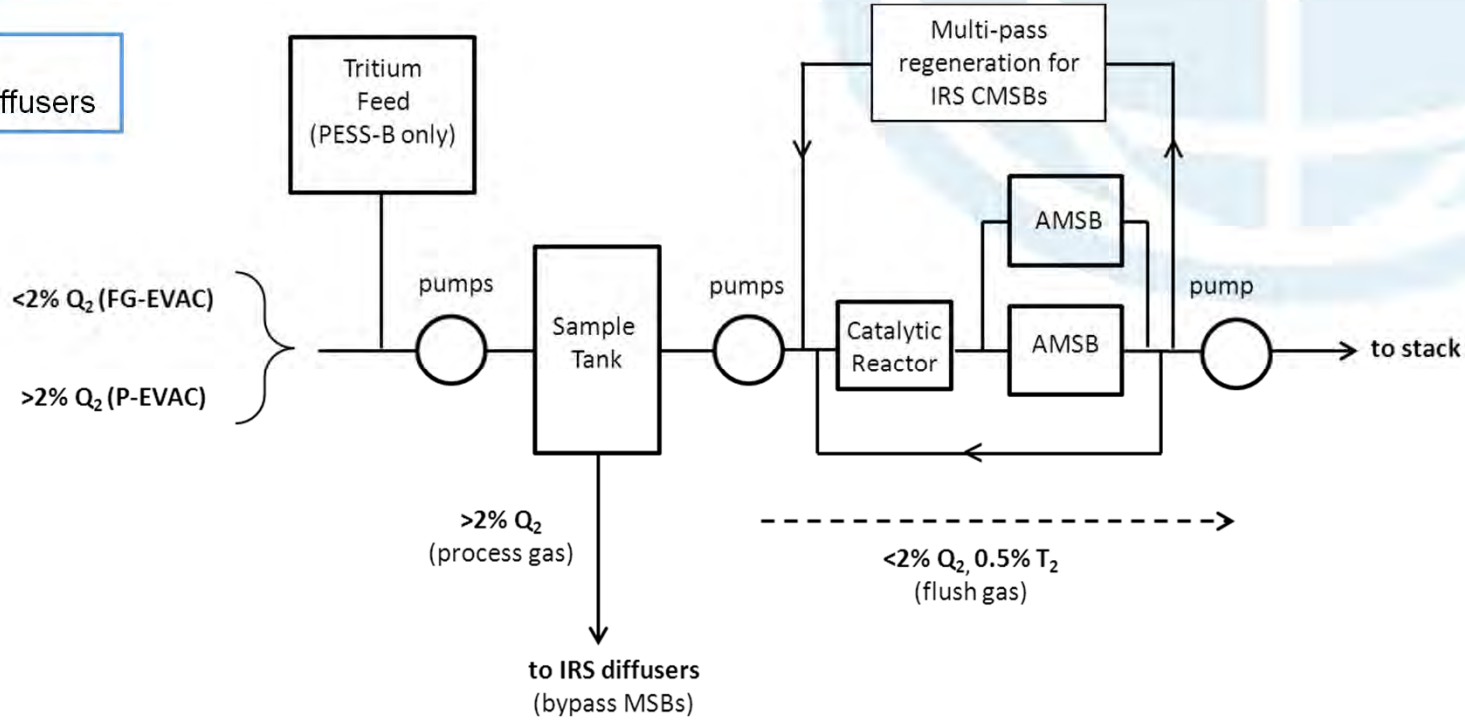

Advantages	Disadvantages
• Fewer components/less space requirements • No additional diffusers required	• Additional Pd guard bed would need to be added to front of IRS diffuser train if IRS Configuration 2 is chosen • Some dilution of process stream with flush gases may occur but diffusers can be sized appropriately to minimize this effect

Process Evacuation and Stripper System (PESS)

Configuration 2:
Added diffuser in PESS

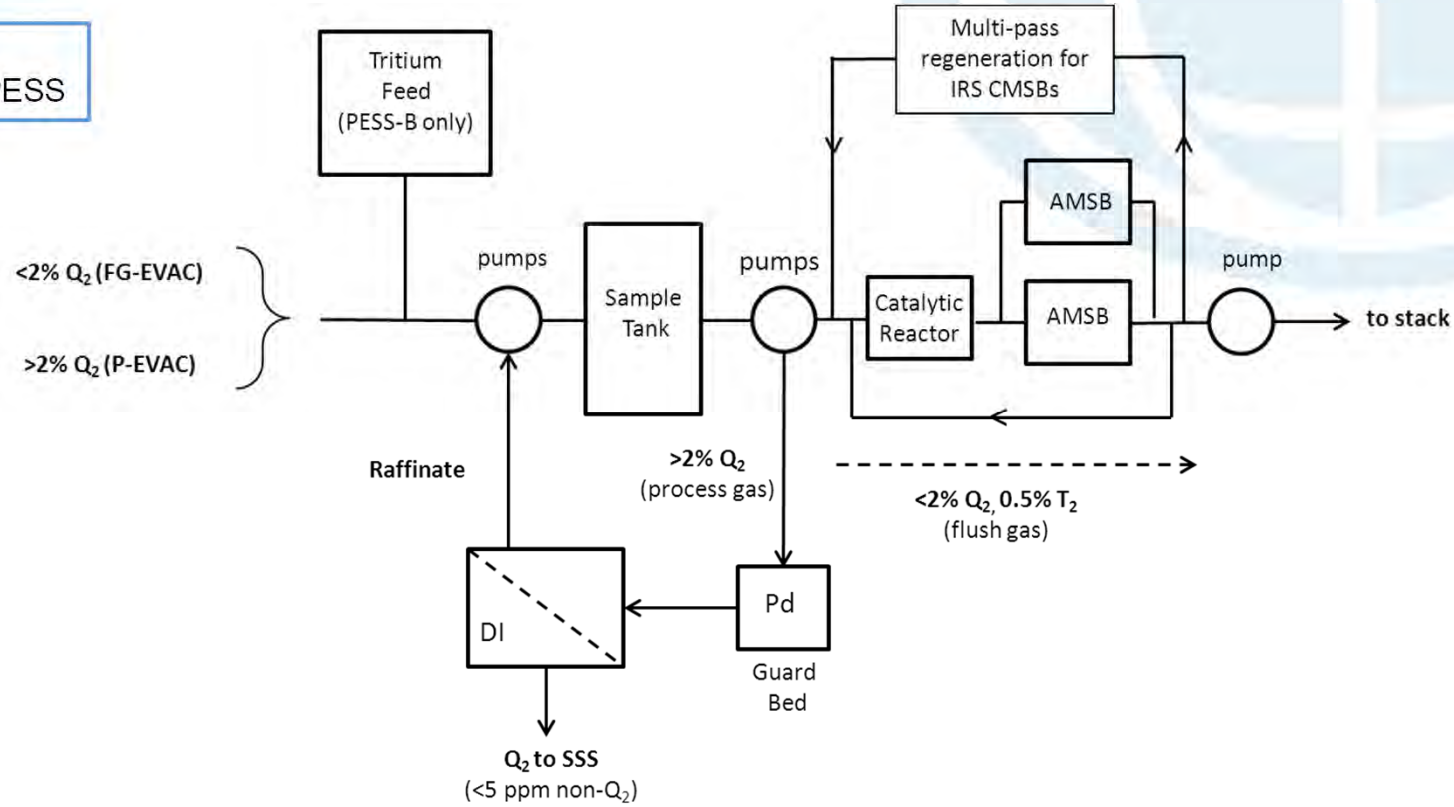

Advantages	Disadvantages
• Allows for re-processing of product gases outside of main process stream (no dilution)	• More components/larger space requirements • Uncertainty in the effect of unknown impurities and hydrocarbons on the Pd guard bed and diffuser integrity

TPS Pre-Conceptual Design Conclusions

- **Highly reliable tritium processing requires two parallel processing trains (Train A and Train B)**
  - **Preventive maintenance**
  - **Corrective maintenance**
- **Initial facility tritium inventory estimate ~ 115 g**
  - **Lower inventory expected in Conceptual Design**
- **Facility gaseous tritium emissions ~ 5200 Ci / year**
- **Enhanced Conceptual Design – Target 12/31/13**

SRNL

Acknowledgements/Contributors

SRNL	SRNS Design Engineering
Anita Poore	Ed Wilcox
Katie Heroux	Ken Karius
Gregg Morgan	Nagarajan (Nathan) Shanmuganathan
Dave Babineau	Mike Sapp